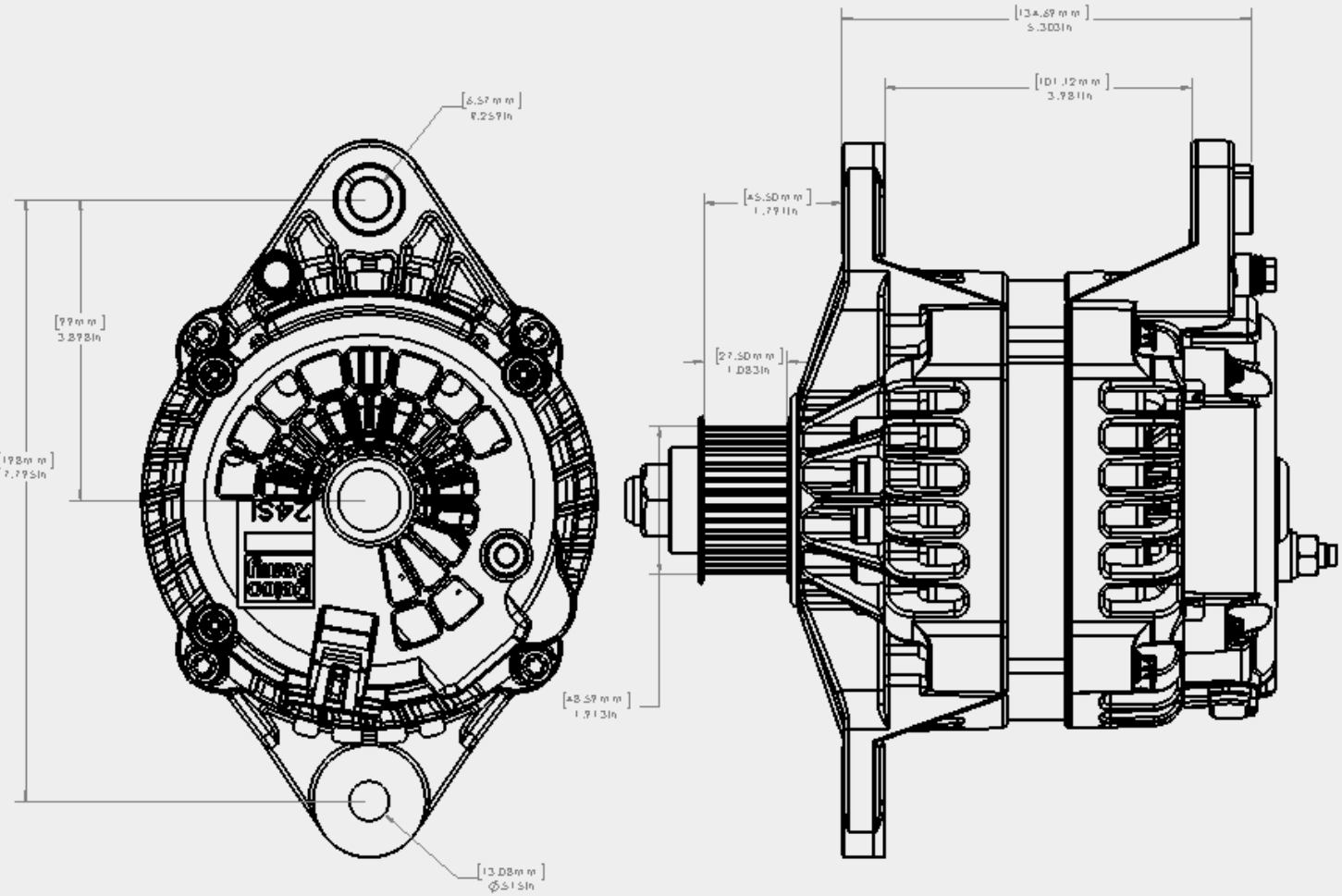
[134.69 mm]
5.301in
[101.12 mm]
3.981in
[45.50 mm]
1.791in
[27.50 mm]
1.083in
[48.59 mm]
1.913in
[6.57 mm]
0.259in
[99 mm]
3.898in
[198 mm]
7.795in
[13.08 mm]
Ø.515in
241
Delco Remy

C